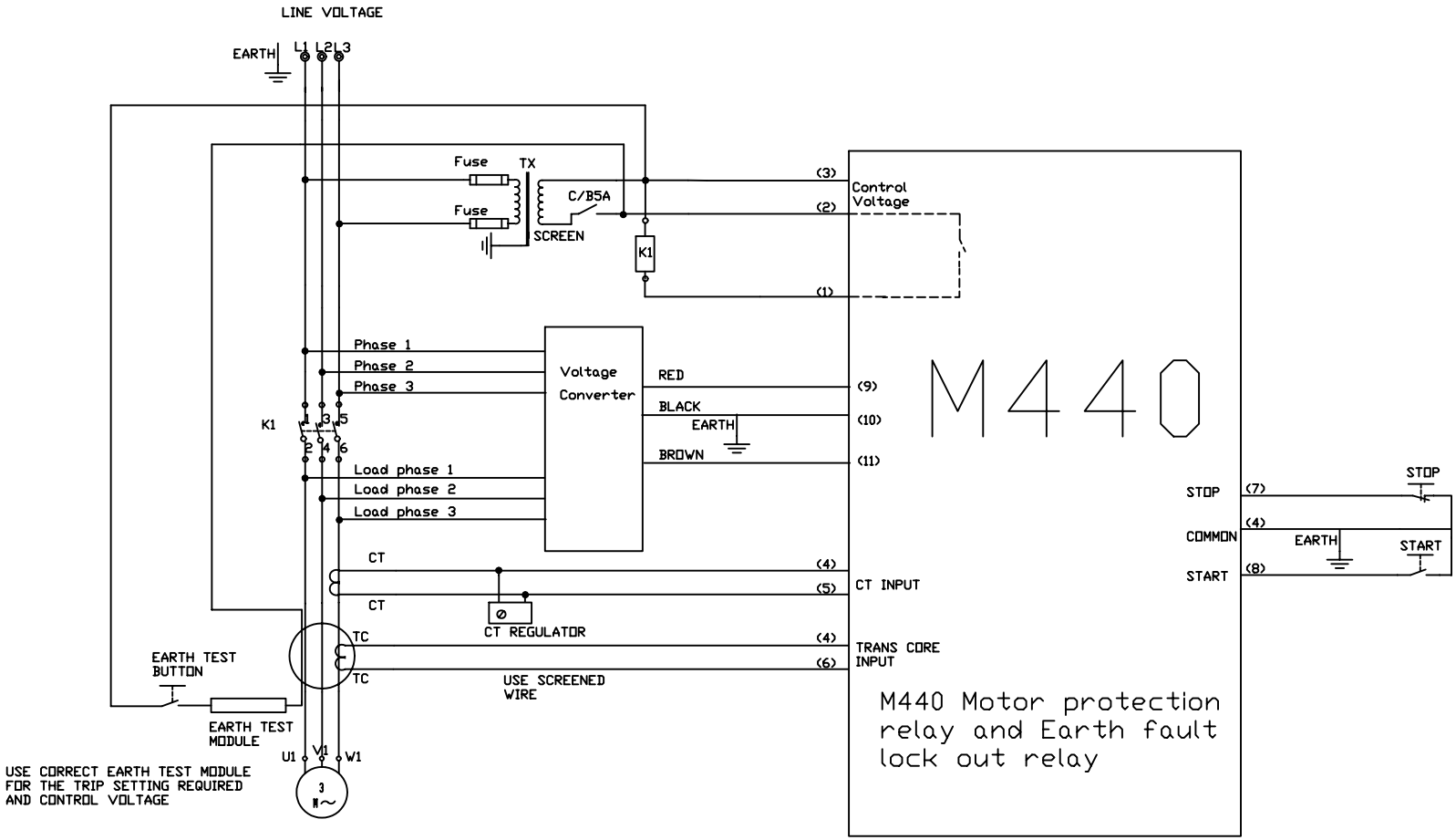

DRG.No. 04-045

REV. 01

( ) PIN NUMBER ON BASE

NINGI SERVICES P.O.BOX 13672
TEL (013) 692 3372 LERAATSFONTEIN
FAX (013) 692 3392 1038

TITLE: M440

	NAME	DATE
DRAWN	E.V.R.	14/03/05
REV	E.V.R.	18/12/07
APPROVED		

DRG.No. 04-045 REV. 01

SCALE

IF IN DOUBT ASK

TOLERANCES

CROSS REFERENCE

REV	DATE	BY	APPR.	DESCRIPTION	DCR No.
1					
2					
3					
4					
5					
6					

100 150